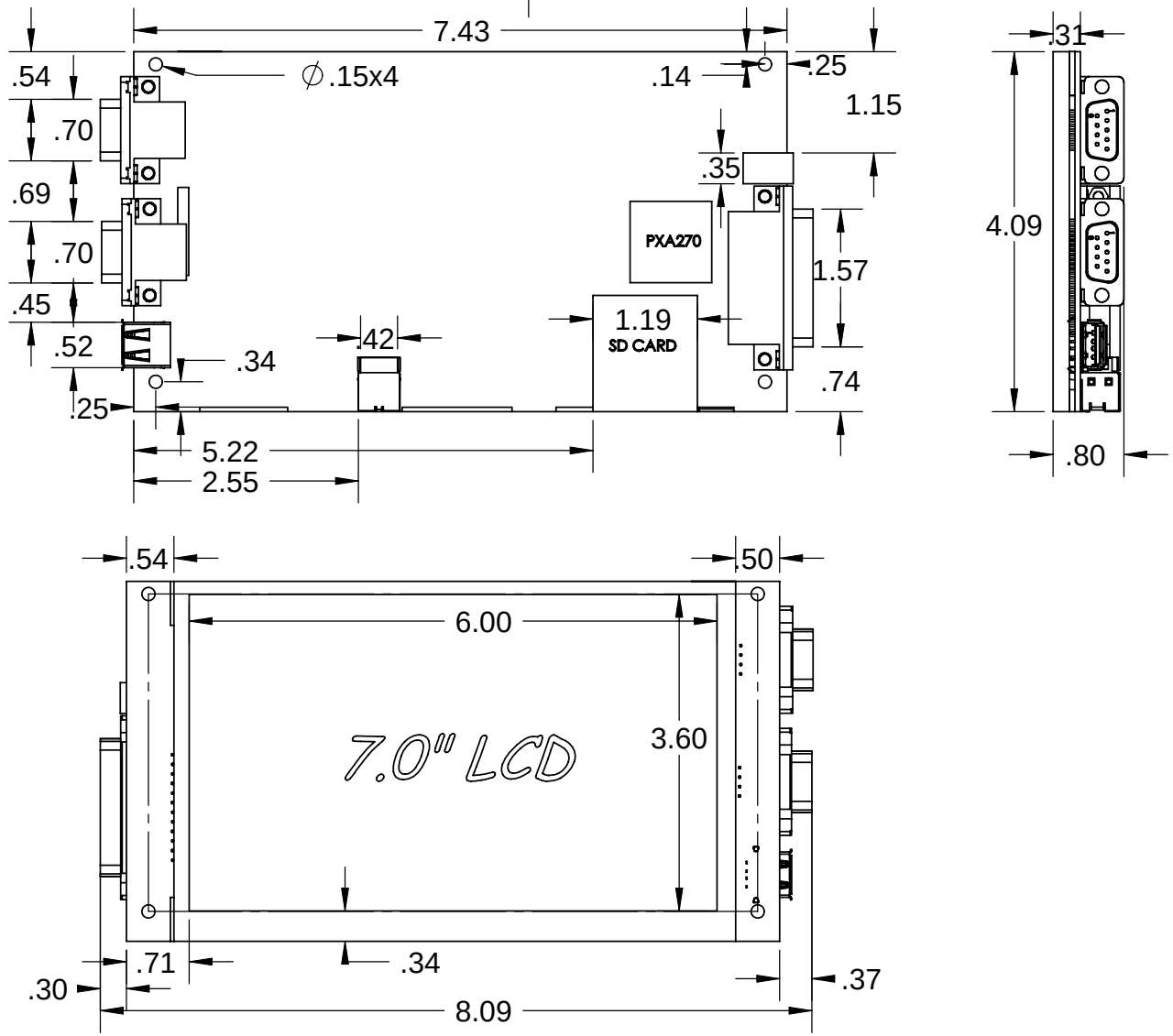


THE INFORMATION CONTAINED IN THIS DRAWING IS THE SOLE PROPERTY OF RLC ENTERPRISES INC. ANY REPRODUCTION IN PART OR AS A WHOLE WITHOUT THE WRITTEN PERMISSION OF RLC ENTERPRISES, INC. IS PROHIBITED.

TITLE:

# RLC_MICROPOD_VII

| | | | |
|---|---|---|---|
| AUTHOR: M.Warren | MATERIAL: .0625 FR4 | DWG NO. ALL VIEWS | A4 |
| HARDWARE REVISION: 0 | | | SCALE:1 |
| DRAWING REVISION: 0 | | | |
| DRAWING TYPE: Mechanical | UNITS: INCHES | Date: 7/6/09 | SHEET 1 OF 1 |