XSCALE_CAN REV2

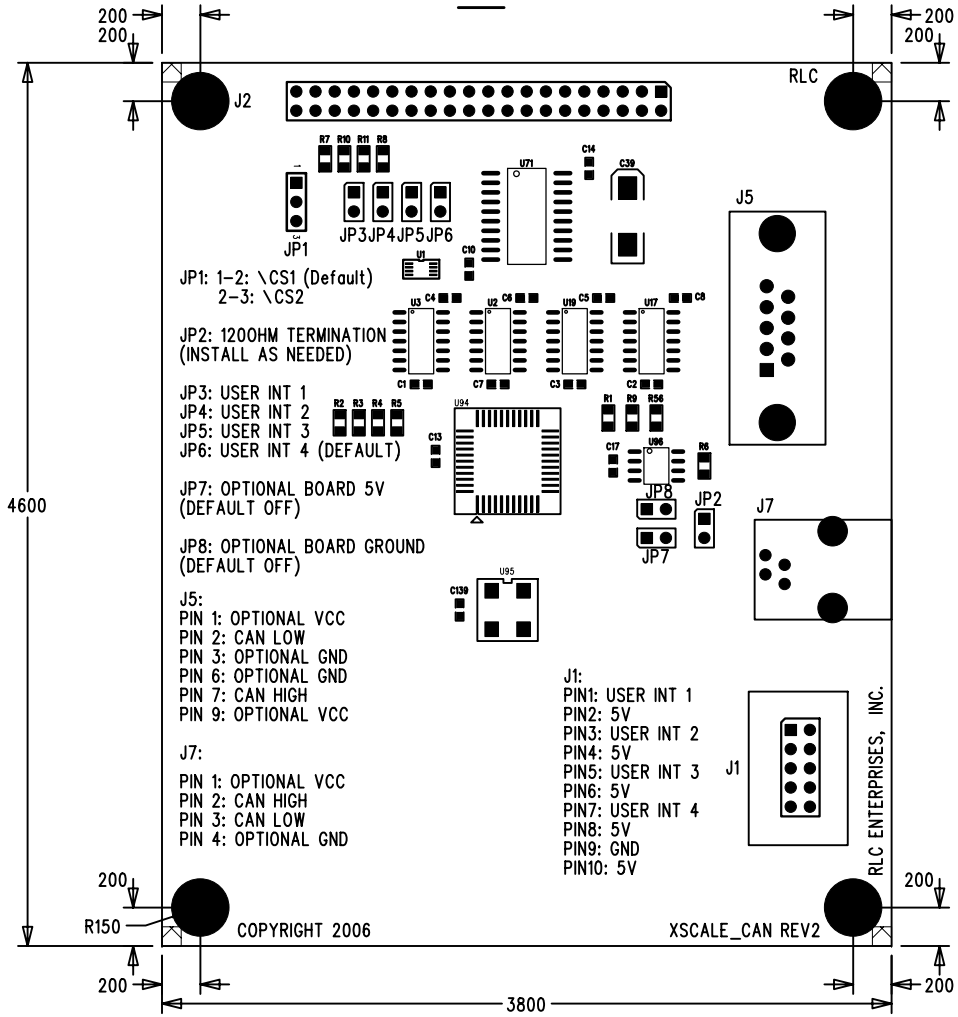

7 MIL SPACING
7 MIL TRACE WIDTH
DIMENSIONS IN MILS

TOP SILK SCREEN

TOP COPPER